# THE GAS UTILITIES'S AND THE JAPAN GAS ASSOCIATION'S EFFORTS TO IMPROVE SAFETY

Kunihiro Hara
Assistant Manager of Safety Technology Sec.,Gas Technology Dept.,
The Japan Gas Association

## 1. City Gas Safety Regulations in Japan

With the exception of a few major supplies of gas, gas utilities in Japan are vertically organized, covering gas procurement, production, transport, distribution and sales, and the gas utilities themselves handle the safety management associated with such activities.

In most Western countries, the gas meter outlet marks the boundary between the gas utility and the consumer in terms of safety obligation, and also in terms of ownership. In Japan, however, the boundary in terms of ownership is the boundary between the road and the consumer's premises. Thus, the safety obligation of gas utilities extends to house pipes downstream of the gas meter within the consumer's premises and even to gas outlets. Moreover, gas utilities are obliged to check the integrity of gas appliances connected to gas outlets and to provide consumers with safety notifications on the use of such gas appliances.

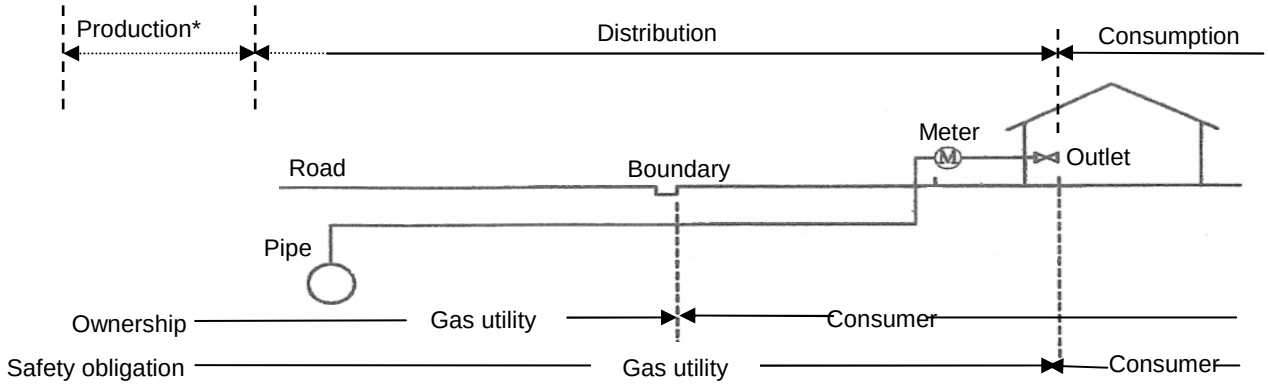


* Includes all facilities between a production facility (e.g. LNG terminal) and the beginning of a pipe network.

Figure.1 Ownership boundary and safety obligation boundary in Japan

## 2. Safety Goals Announced by the Gas Industry of Japan

The laws and regulations in Japan that put priority on the safety of consumers help to reduce gas accidents. Furthermore, the Japanese gas industry, to contribute to the prevention of global warming by making it safer for consumers to use natural gas as an energy source that excels in environmental performance and energy efficiency, is jointly pursuing a set of gas safety goals to be achieved by 2010, which is the timeframe proposed by the Government. The industry is also implementing various safety programs beyond its legal obligations, aiming to completely eliminate all fatal gas accidents.

Table.1 Gas safety goals

| | Goals to be achieved by 2010 |
|---|---|
| Overall | Fatal accidents eliminated almost to zero (less than one per year) |
| Production stage | Fatal accidents eliminated almost to zero (to the level of once in 5 to 10 years) |
| | Non-fatal injury, poisoning, explosion and fire eliminated to almost zero (to the level of once in 2 to 3 years) |
| Distribution stage | Fatal accidents eliminated almost to zero (to the level of once in 2 to 3 years) |
| | Non-fatal injury, poisoning, explosion and fire reduced to less than 10 per year |
| Consumption stage | Fatal accidents eliminated almost to zero (to the level of once in 2 to 3 years) |
| | Non-fatal injury, poisoning, explosion and fire reduced to less than 10 per year |

Thanks to past efforts by gas utilities, the number of gas accidents has been decreasing steadily. In particular, the number of accidents in the production stage has already decreased to the target level. However, the numbers of accidents in the distribution and consumption stages are still considerably larger than the target level.

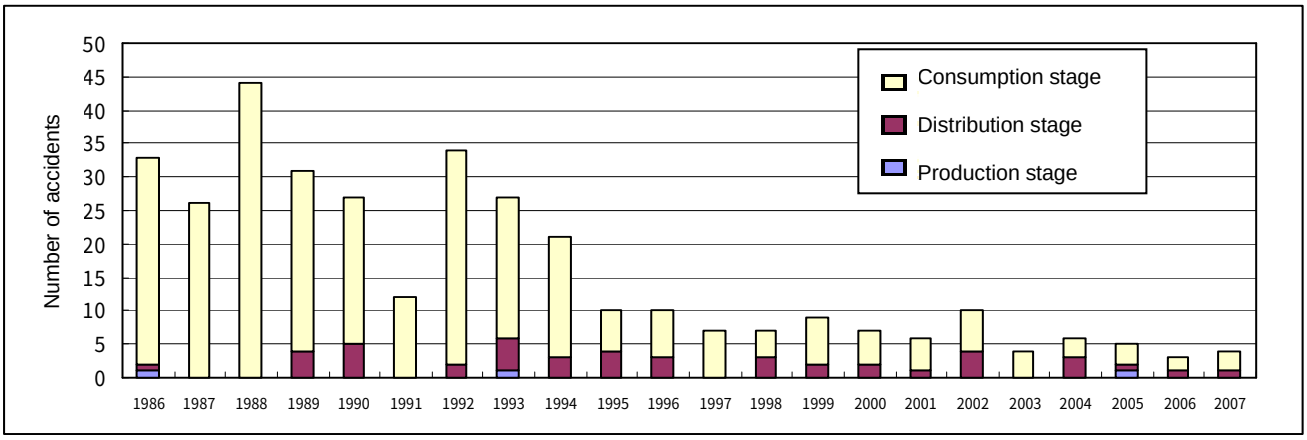


Figure.2 Trend in the number of fatal gas accidents

The probability of an accident (average over the last six years) based on the number of consumer households and population is already at the level of $10^{-6}$ to $10^{-8}$, which is a high level of safety. However, it is generally considered to be very difficult to achieve an accident probability of less than $10^{-6}$, and therefore continuous efforts are required even to maintain the present level of safety.

The Japan Gas Association seeks to maintain and improve safety levels while achieving the safety goal in cooperation with individual gas utilities, and will continue to promote both hardware-oriented strategies with a focus on improving technologies already developed for preventing gas leaks and exhaust gas poisoning and software-oriented strategies with a focus on the industry's voluntary arrangements for personnel qualifications and consumer education programs.

Since Japan is one of the most earthquake-prone countries of the world, we will also continue to work hard on preventing secondary hazards following an earthquake.

## 3. Specific Efforts for Improving the Safety Level

### (1) Actions concerning gas pipes, gas meters and gas outlets

#### (a)Rehabilitation-repairing technique

The rehabilitation-repairing technique is one way to prevent leakages due to the corrosion or breakage of old gas pipes. Since this is a trenchless method, it is less costly to repair gas pipes by this technique than replacement by new gas pipes, and the gas pipes repaired by this technique maintain their integrity for a long period (40 to 50 years). Many gas utilities often employ this method because of these advantages. Many variations of the technique have been developed for different types and apertures of gas pipes:

Table.2 Major categories of the rehabilitation-repair technique

| Category | Major application | Major purposes | Number of developed techniques |
|---|---|---|---|
| Reverse lining method | Steel pipes and cast iron pipes with aperture of 100mm or more | Prevention of leakage by cracking or breakage<br>Prevention of leakage by earthquake<br>Prevention of joint leakage | 17 |
| Epoxy-resin lining method | Steel pipes with aperture of 100mm or less | Prevention of leakage by corrosion<br>Prevention of joint leakage | 12 |

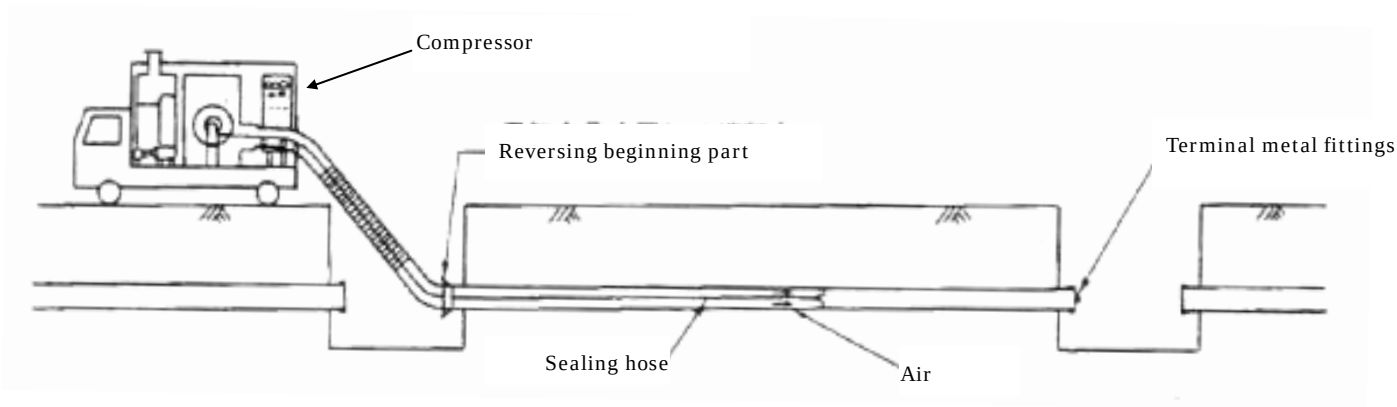


Figure.3 The example of reverse lining method

(b) Flexible piping method

A bellows-like stainless steel pipe is covered by a PVC layer to produce gas pipes for the flexible piping method. These flexible gas pipes excel in corrosion resistance and seismic resistance. Since a flexible gas pipe can be laid over a considerable distance without any joint, these pipes are effective for preventing gas leaks. Installation is also easy, so most gas utilities use flexible gas pipes.

(c)Intelligent gas meters

In addition to the metering capability, an intelligent gas meter can monitor the consumption of gas by a built-in microcomputer, which automatically shuts off the gas when a large amount of gas is suddenly used, when the supply of gas has continued over an abnormally long period, when the gas pressure has dropped, or when an abnormally large motion is detected (e.g. an earthquake). Intelligent gas meters have been installed at almost all consumer premises except large-demand consumers, and have thus helped dramatically reduce gas leaks.

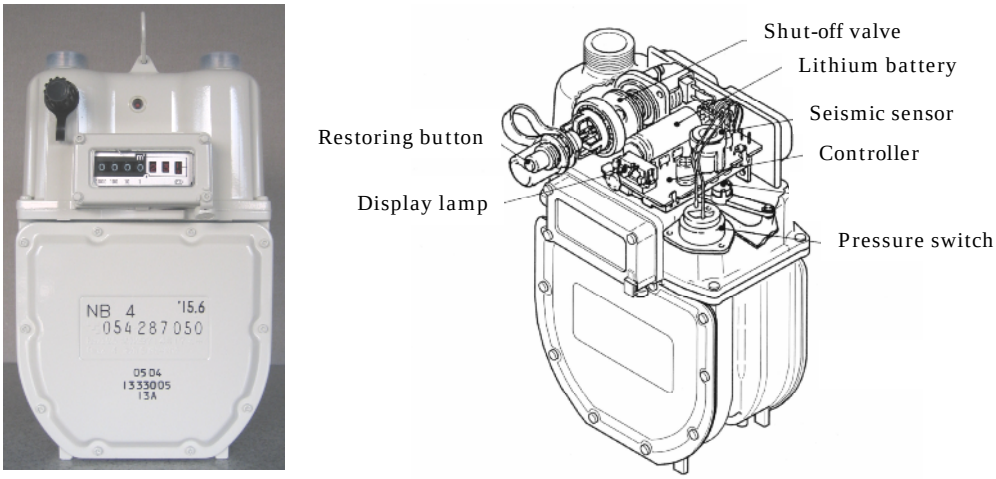


Figure.4 Intelligent gas meter

(d) Excess flow prevention gas taps

An excess flow prevention gas tap is designed so that a sudden flow of too much gas lifts up a ball in the gas tap to block the passage of gas. These gas taps improve safety because the gas is automatically shut off in case the rubber tube connected to the tap disengages or breaks. All newly installed gas taps are excess flow prevention gas taps.

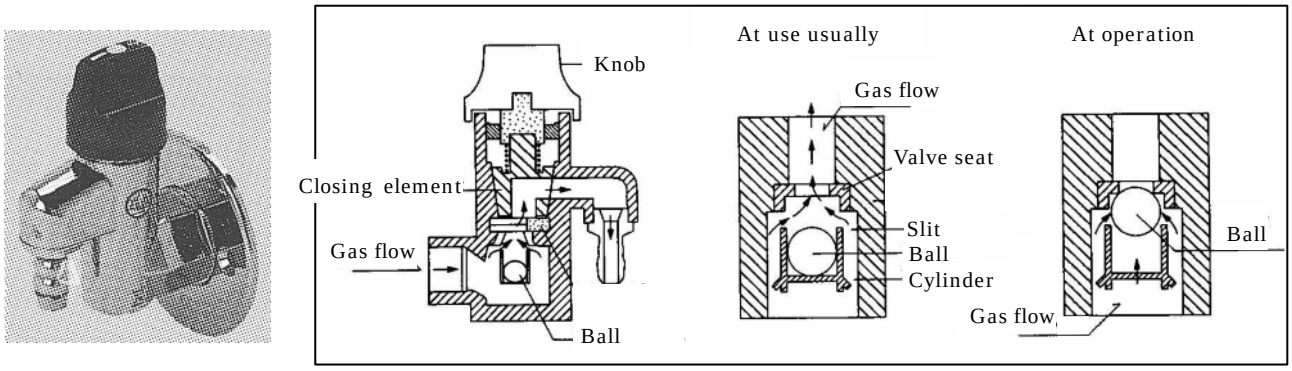


Figure.5 Excess flow prevention gas taps

(2) Actions concerning gas appliances

(a) Incomplete combustion prevention devices

This is a safety device that prevents CO poisoning by incomplete combustion by shutting off the gas before incomplete combustion in the burner happens due to insufficient oxygen supply, which could be caused by a drop of oxygen concentration in the room, or by the clogging of exchanger fins in the appliance, for example. There are different types of incomplete combustion prevention devices, including those which detect a change in the flame condition by a temperature sensor and those which use a sensor that directly monitors the carbon monoxide concentration. In Japan, CO poisoning by exhaust gas is the main cause of fatal gas accidents, and so the country has witnessed major efforts to develop and implement technologies for preventing incomplete combustion. Today, incomplete combustion prevention devices are installed on more than 98% of water

heaters for indoor installation (indoor intake and indoor exhaust).

(b) Flame failure devices and cooking oil overheating prevention devices

The flame failure device is a safety device that shuts off the gas and prevents gas leakage following such events as ignition failure, blow out and blow off.

In addition, cooking stoves have a safety device that monitors the temperature at the bottom of the pan and shuts off the supply of gas to the burner when the set temperature (approx. 250°C) is exceeded. This has become a common practice to prevent fires caused by ignition of overheated cooking oil, which used to be a main cause of many fires involving a cooking stove.


Figure.6 Flame failure devices and cooking oil overheating prevention devices

(c)Alarms

Alarms act as safety devices that complement the multiple safeguards described above. There are different types of alarms as described below:

- Gas leakage alarms

  The gas leakage alarm quickly detects any gas leakage and warns the consumer before the gas concentration reaches a dangerous level. A gas leakage alarm can be designed to interact with the intelligent gas meter to shut off the gas automatically following the detection of a gas leak.

- Incomplete combustion alarm

  The incomplete combustion alarm detects CO from incomplete combustion in the burner of a gas appliance and issues an alarm.

  A single alarm unit can combine the functions of these two types of alarms, and the installation of such hybrid alarms is becoming more common.

(3) Earthquake preparedness

(a)Emergency measures

To be able to identify the districts where significant damage has occurred following an earthquake and to stop the supply of gas only to such districts, thus preventing secondary hazards while minimizing the districts affected by supply interruption, gas utilities have divided their service areas into blocks. Seismometers have been installed to make the decision on whether to stop the supply And arrangements have also been made to interrupt the supply of gas to any district where a seismic motion stronger than a predetermined level was recorded.

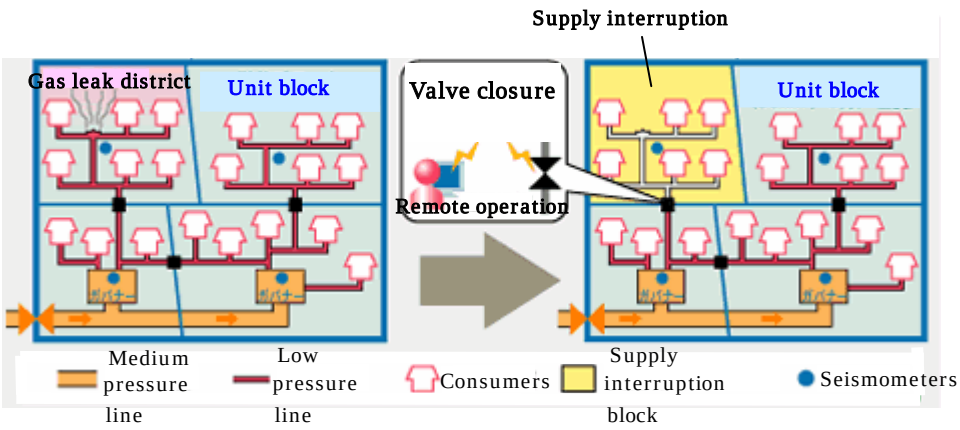


Figure.7 The example of blocking supply area

(b)Disaster relief and recovery

Arrangements have been made to ensure that all other gas utilities of Japan assist any gas utility that is forced to interrupt the supply of gas following a major disaster.

(c)Strengthening of infrastructures

Gas utilities are expanding the use of earthquake-resistant gas pipes such as polyethylene tubes and installing intelligent gas meters capable of shutting off the gas automatically by means of a seismic sensor.

## 4. Future Strategies

The Japan Gas Association formulated the gas industry's approach to the creation of low-carbon society by 2030 under Gas Vision 2030, which included the goal of "maintenance and improvement of a high safety level". Specific actions include developing technologies for devices to further raise the safety level, including a CO detector that can be built into highly-efficient water heaters which are becoming more common, and a battery-driven alarm that can be installed anywhere.